Ce document a été mis en ligne par l'organisme FormaV®.

Toute reproduction, représentation ou diffusion, même partielle, sans autorisation préalable, est strictement interdite.

Pour consulter tous nos sujets d'annales et corrigés du CAP Aéronautique, veuillez visiter :
capaeronautique.fr/annales-sujets-et-corriges

CAP AÉRONAUTIQUE

Option : Systèmes

ÉPREUVE EP1 : Utilisation de la documentation technique.

DOSSIER RESSOURCES

SESSION 2022

Sommaire :

- Carte de travail N° AJ-A-27-60-00-00AA0-040A-A : description et position des servocommandes sur l'aéronef (page 2),
- Carte de travail N° AJ-A-27-64-51-00AAA-520A-A : dépose des servo commandes types « 2CL1 » et « 2CL2 »,
- Illustrated parts catalogue : IPC 27-50-05 « servo control »,
- Aircraft maintenance manuel : AMM 27-55-05 « servo control description ».

Réf : AJ-A-27-60-00-00AA0-040A-A	Selected applicability : ALL
Issue : 010	Date : March 31, 2016

SPOILER - DESCRIPTION

Spoiler description :

The spoilers are the control surfaces on the top surface of the wing. There are five spoilers on the rear top surface of each wing.

The spoiler system has these functions :

- To help control the aircraft on the roll axis,
- To increase drag and to reduce lift (speedbrake function).

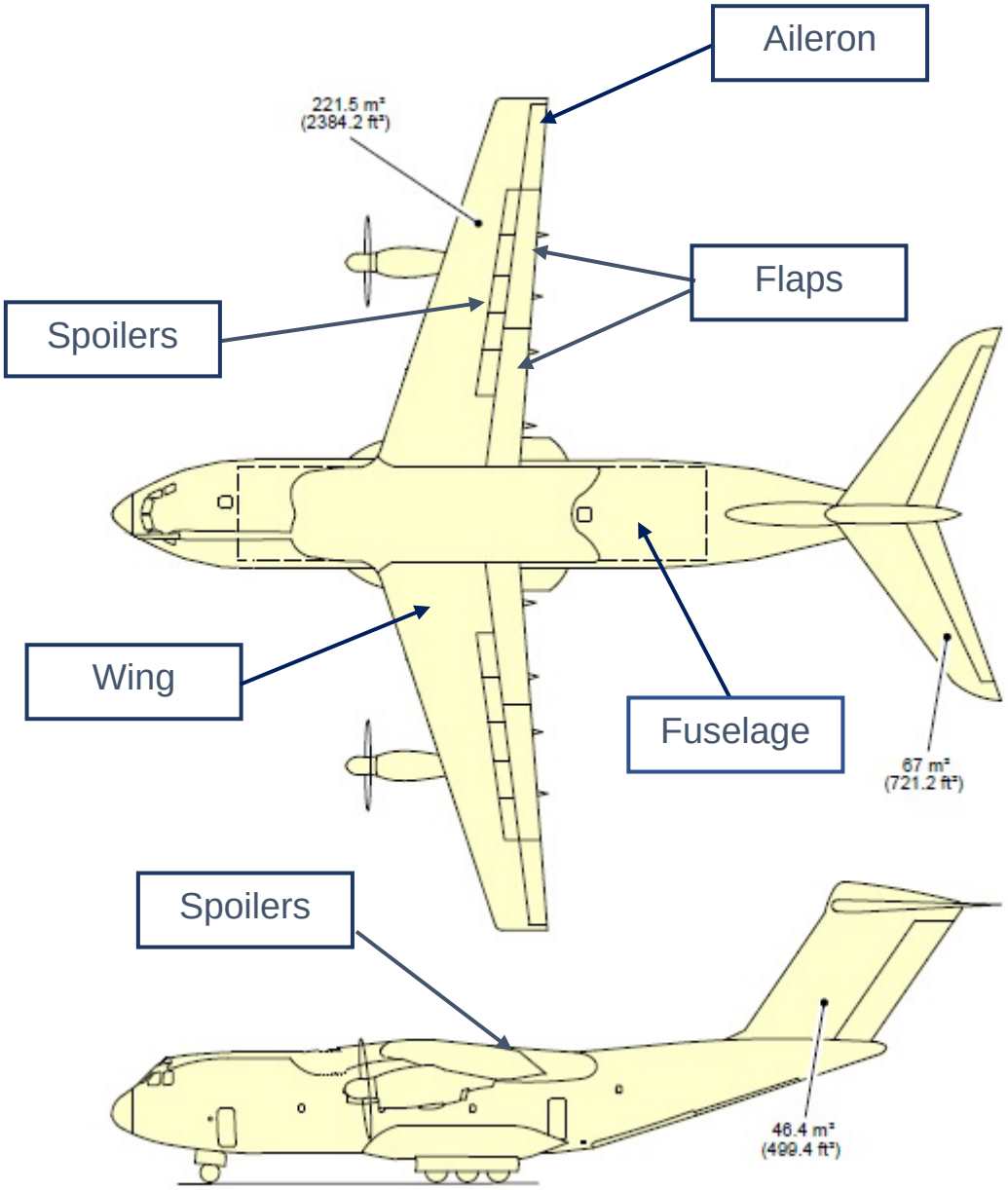

Lexique :

- Bracket : support / ferrure,
- Spoiler key moog : broche de sécurité,
- side stick unit : banquette de commande mini manche,
- cotter pin : goupille,
- access panel : trappe d'accès ou panneau d'accès,
- AFT : arrière,
- Forward : avant,
- Plug-blanking : bouchon d'obturation (hydraulique),
- Cap-blanking : bouchon de connecteur (électrique),
- Hose : tuyauterie souple / durite,
- Flap : volet de courbure,
- Bonding strap : tresse de métallisation,
- Jack catcher : tôle support,
- Joint plate : couvre joint,
- Safety pin : broche ou épingle de sécurité, de blocage,
- Sliding bush : entretoise / palier lisse,
- Discard : rebuter / jeter,
- Fretting : dommages (micro arrachement de particule en surface) causé par des phénomènes de mouvements relatifs et répétés (ex vibrations).

Réf : **AMM 27-55-05**	Selected applicability : ALL
Issue : 008	Date : March 20, 2017

Spoiler description

Figure 1 : Spoliers location (vue de dessus)

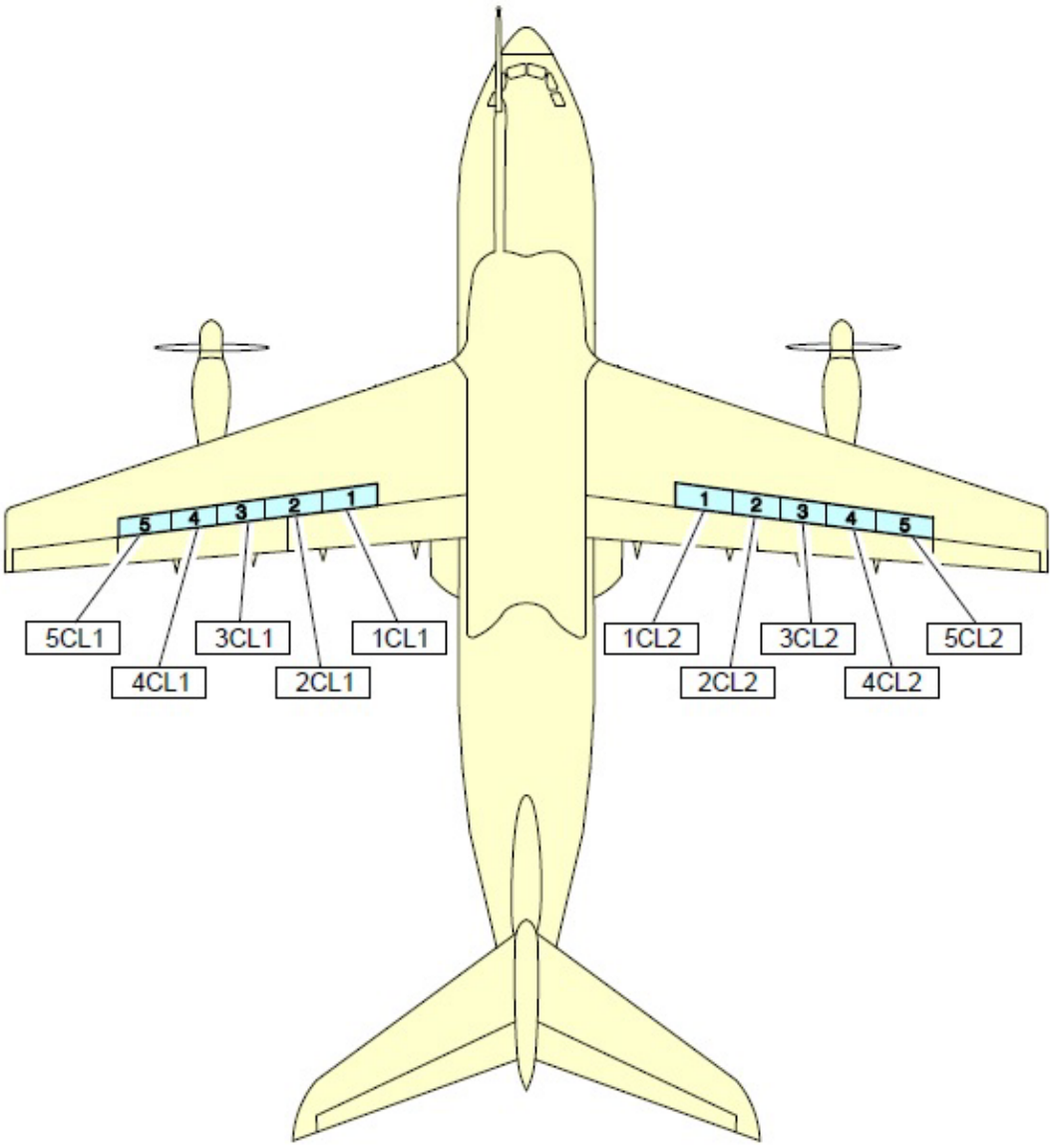

Réf : **AMM 27-55-05**	Selected applicability : ALL
Issue : 008	Date : March 20, 2017

Spoiler description

Figure 2 : Spoliers / ailerons / flaps location
Hydraulic spoiler dlocation

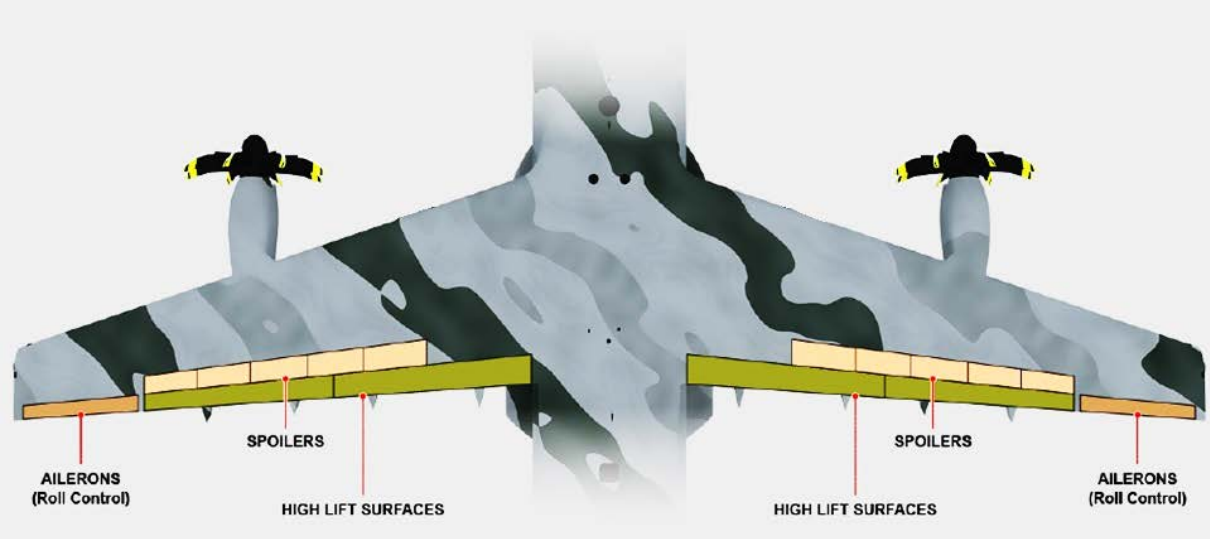

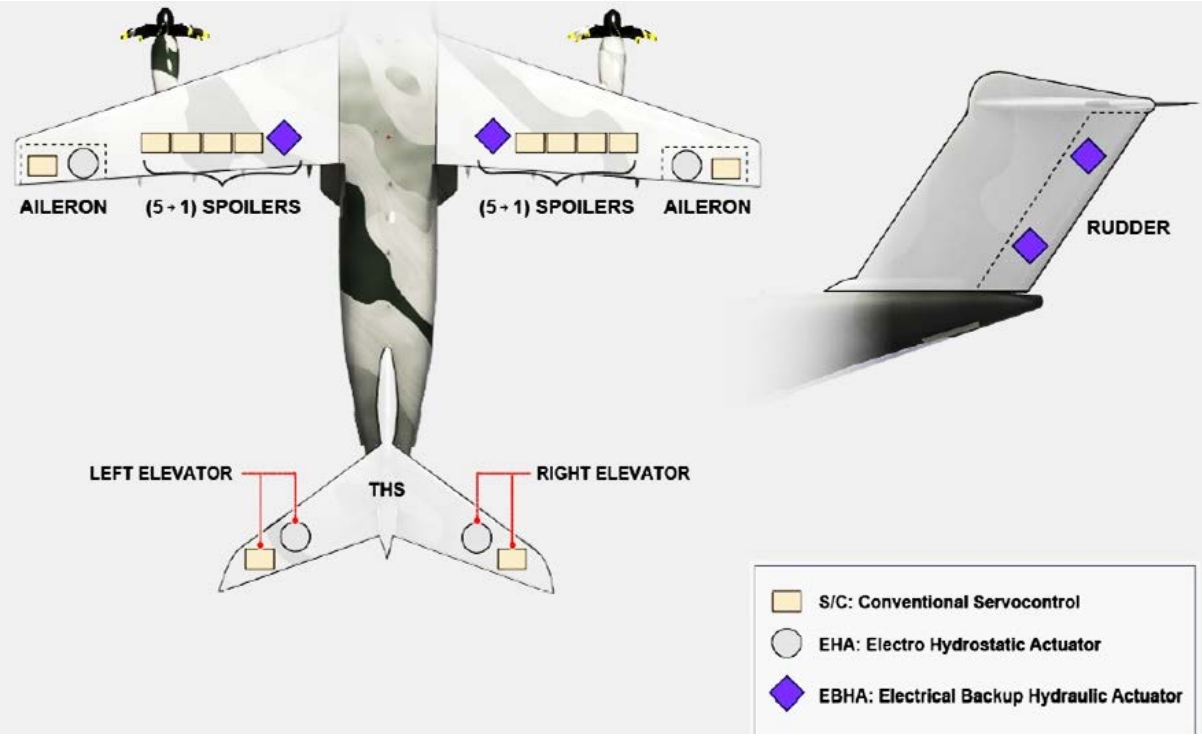

Réf : **AMM 27-55-05**	Selected applicability : ALL
Issue : 008	Date : March 20, 2017

Spoiler description

Figure 3 : Spoliers hydraulic description.

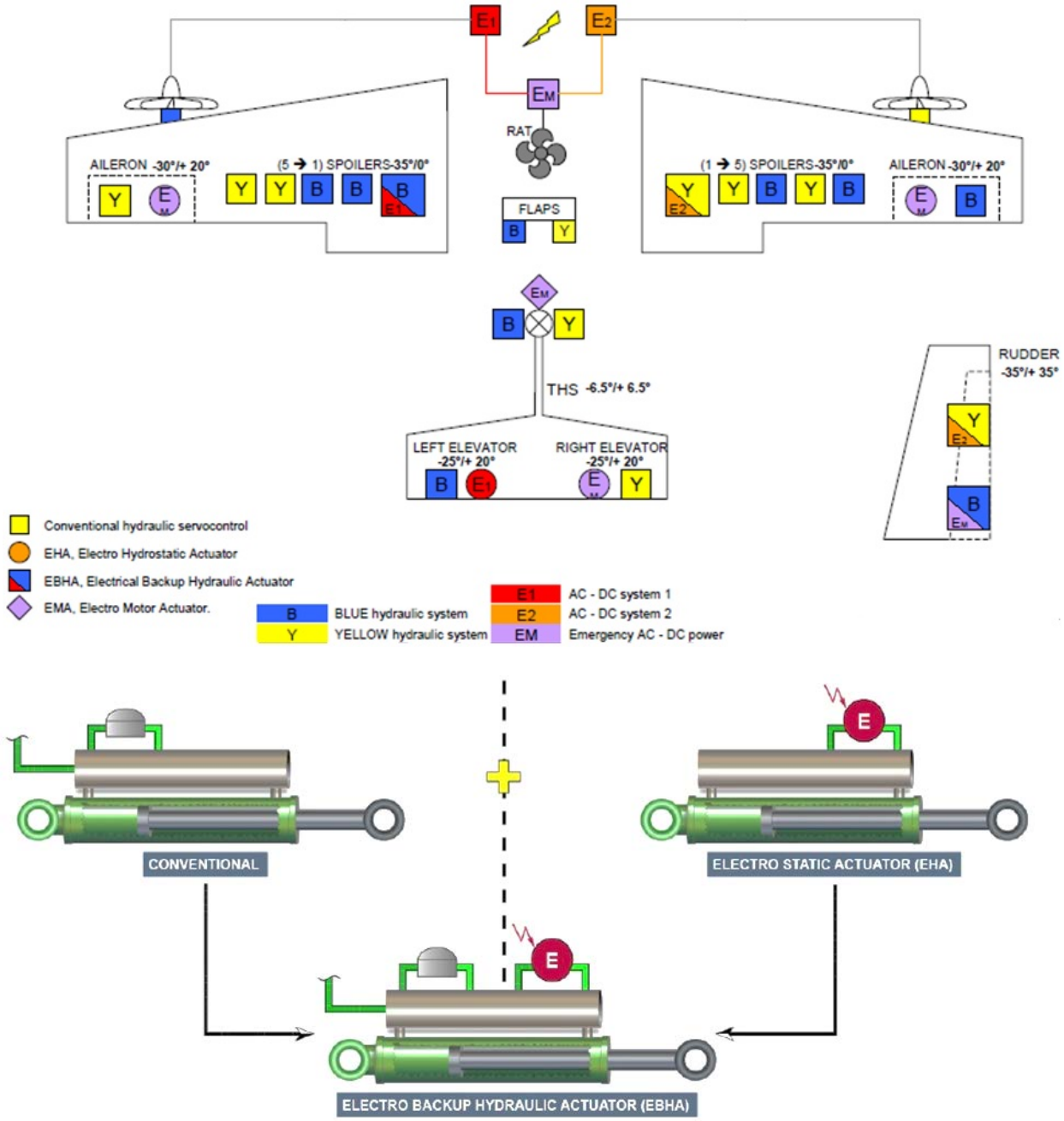

Servo Control - Spoiler - Remove procedure (2CL1) and (2CL2).

Required person(s) : 1 person(s).

Safety Conditions :

WARNING : MAKE SURE THAT THE SAFETY DEVICES AND THE WARNING NOTICES ARE IN POSITION BEFORE YOU START A TASK ON OR NEAR :

- THE FLIGHT CONTROLS,
- THE FLIGHT CONTROL SURFACES,
- THE LANDING GEAR AND RELATED DOORS,
- THE CARGO DOORS,
- THE PROPELLERS,
- OTHER COMPONENTS THAT MOVE.

MOVEMENT OF COMPONENTS CAN CAUSE DEATH OR INJURY TO PERSONS AND/OR DAMAGE TO EQUIPMENT.

WARNING : MAKE SURE THAT ALL THE TRAVEL RANGES OF THE FLIGHT CONTROLSURFACES ARE CLEAR. MOVEMENT OF THE FLIGHT CONTROL SURFACES CAN CAUSE INJURY TO PERSONS AND DAMAGE TO THE AIRCRAFT OR EQUIPMENT.

WARNING : OBEY THE HYDRAULIC SAFETY PRECAUTIONS. WORK ON THE HYDRAULIC SYSTEMS CAN BE DANGEROUS.

Required conditions :

1. The Required Conditions given in this procedure start from the aircraft standard maintenance configuration.
2. Energize the aircraft electrical circuits. (Ref. AJ-A-24-41-00-01ZZZ-391Z-A).
3. Make sure that the flaps are retracted. (Ref. AJ-A-27-50-00-01ZZZ-396Z-A).
4. In the cockpit, On the left and right lateral consoles, on each side stick unit, install the PIN-SIDE STICK LOCKING (50) – (Ref. Fig4).
5. In the cockpit, on the center pedestal, on the FLAPS control lever, install the LOCKING TOOL FLAP CONTROL LEVER (60) – (Ref Fig 5).
6. On the center pedestal, on the FLAPS control lever, put a WARNING NOTICE in position to tell persons not to operate the lever.
7. On the left and right lateral consoles, on each side stick unit, put a WARNING NOTICE in position to tell persons not to operate it.

8. You must obey the hydraulic safety procedure when you do work on the hydraulic system. (Ref. AJ-A-29-00-00-01ZZZ-913Z-A).
9. Put the hydraulic systems in the safetied-for-maintenance configuration. (Ref. AJ-A-29-00-00-03 ZZZ-394Z-A).
10. Open, safety/lock and tag this (these) CIRCUIT BREAKER(S) :

Panel	Designation breaker	Location
300 VU	997CL	LH 1246
300 VU	802CL	RH 1248

11. Use an ACCESS PLATFORM 5M (16 FT / 4.8 m) - ADJUSTABLE in position at zone 573 or 673 to get access to the applicable spoiler servo control.
12. Put the SAFETY BARRIERS in position.
13. For the spoiler servo control (2CL1), remove access panel 573CB,
14. For the spoiler servo control (2CL2), remove access panel 673CB,
15. For the spoiler servo control (3CL1), remove access panel 573EB,
16. For the spoiler servo control (3CL2), remove access panel 673EB,
17. For the spoiler servo control (4CL1), remove access panel 573GB,
18. For the spoiler servo control (4CL2), remove access panel 673GB,
19. For the spoiler servo control (5CL1), remove access panel 573HB,
20. For the spoiler servo control (5CL2), remove access panel 673HB.

PROCEDURE :

Removal of the Spoiler Servo Control (2CL1) and (2CL2).

(Ref. fig 1, 2 and 3).

A. Install the SPOILER KEY MOOG (40) on the maintenance device (41) of the spoiler servo control (6).

B. Set the maintenance device (41) of the spoiler servo control (6) to the "M" position.

NOTE : The spoiler servo control (6) is in maintenance mode.

NOTE : You cannot remove the SPOILER KEY MOOG (40) when the maintenance device (41) is in the "M" position.

C. If necessary, move the spoiler manually to its neutral position while you install the SUPPORT SPOILER SERVO CONTROL (49) on the spoiler servo control (6).

D. **CAUTION : WHEN YOU DISCONNECT THE ELECTRICAL CONNECTORS, MAKE SURE THAT THE DISCONNECTED ELECTRICAL CONNECTORS AND THEIR RELATED RECEPTACLES ARE CLEARLY IDENTIFIED FOR SUBSEQUENT CONNECTION.**

Disconnect the electrical connectors (36) and (37) from the spoiler servo control (6).

E. Put a CAP-BLANKING on the disconnected electrical connector(s).

F. Put the CONTAINER 5 L (1 1/2 USGAL) in position below the hoses (38) and (43).

G. Use pieces of TAPE - ADHESIVE to make match marks on the hydraulic hoses (38) and (43).

H. **CAUTION : YOU MUST HOLD THE HOSE(S) WHEN YOU LOOSEN/TIGHTEN THE CONNECTIONS. MAKE SURE THAT THE HOSE(S) CANNOT TWIST. DAMAGE TO THE HOSE(S) CAN OCCUR IF THEY DO TWIST.**

Disconnect the hydraulic hoses (38) and (43) from the unions (39) and (42).

I. Put a PLUG-BLANKING in the disconnected line end(s).

J. Carefully remove the CONTAINER 5 L (1 1/2 USGAL).

K. If hydraulic fluid spills, clean the area with fluid absorbent (CLEANING AGENT - MULTI PURPOSE).

L. Remove the screw (26), the washers (27) and (29) and disconnect the bonding strap (28).

M. At the aft connection of the spoiler servo control (6) :

(1) Remove and discard the nut (1) from the bracket (35).

(2) Remove the washer (2) and the anti-rotation plate (3) from the bracket (35).

(3) Remove and discard the cotter pin (30) from the nut (34).

(4) Remove the nut (34) and the washer (32) from the pin (4).

(5) Remove the pin (4), sliding bush (33) and spoiler servo control (6) from the bracket (35).

(7) Carefully put the spoiler servo control (6) on its jack catchers (9) and (23).

N. At the forward connection of the spoiler servo control (6) :

(1) Remove and discard the nut (11) from the bracket (16).

(2) Remove the washer (12) and the anti-rotation plate (13) from the bracket (16).

(3) Remove and discard the cotter pin (20) from the nut (21).

(4) Remove the nut (21) and the washer (18) from the pin (14).

(5) Remove the pin (14) and the sliding bush (17) from the bracket (16).

O. Remove the spoiler servo control (6) from the bracket (16).

P. Remove the jack catchers (8), (9), (23) and (24) :

(1) Hold the spoiler servo control (6).

(2) Remove the bolts (10) and (22).

(3) Remove the jack catchers (8) and (9) from the rib (7) and the jack catchers (23) and (24) from the rib (25).

Q. Remove the spoiler servo control (6).

R. Set the maintenance device (41) of the spoiler servo control (6) to the 'A' position with the SPOILER KEY MOOG (40).

NOTE : The spoiler servo control (6) is in operational mode.

S. Remove the SPOILER KEY MOOG (40) from the maintenance device (41) of the spoiler servo control (6).

Réf : AJ-A-27-64-51-00AAA-520A-A	Selected applicability : ALL
Issue : 012	Date : March 20, 2017

Servo Control - Spoiler - Remove procedure

Fig. 1 - Spoiler Servo Controls (2CL1) and (2CL2)

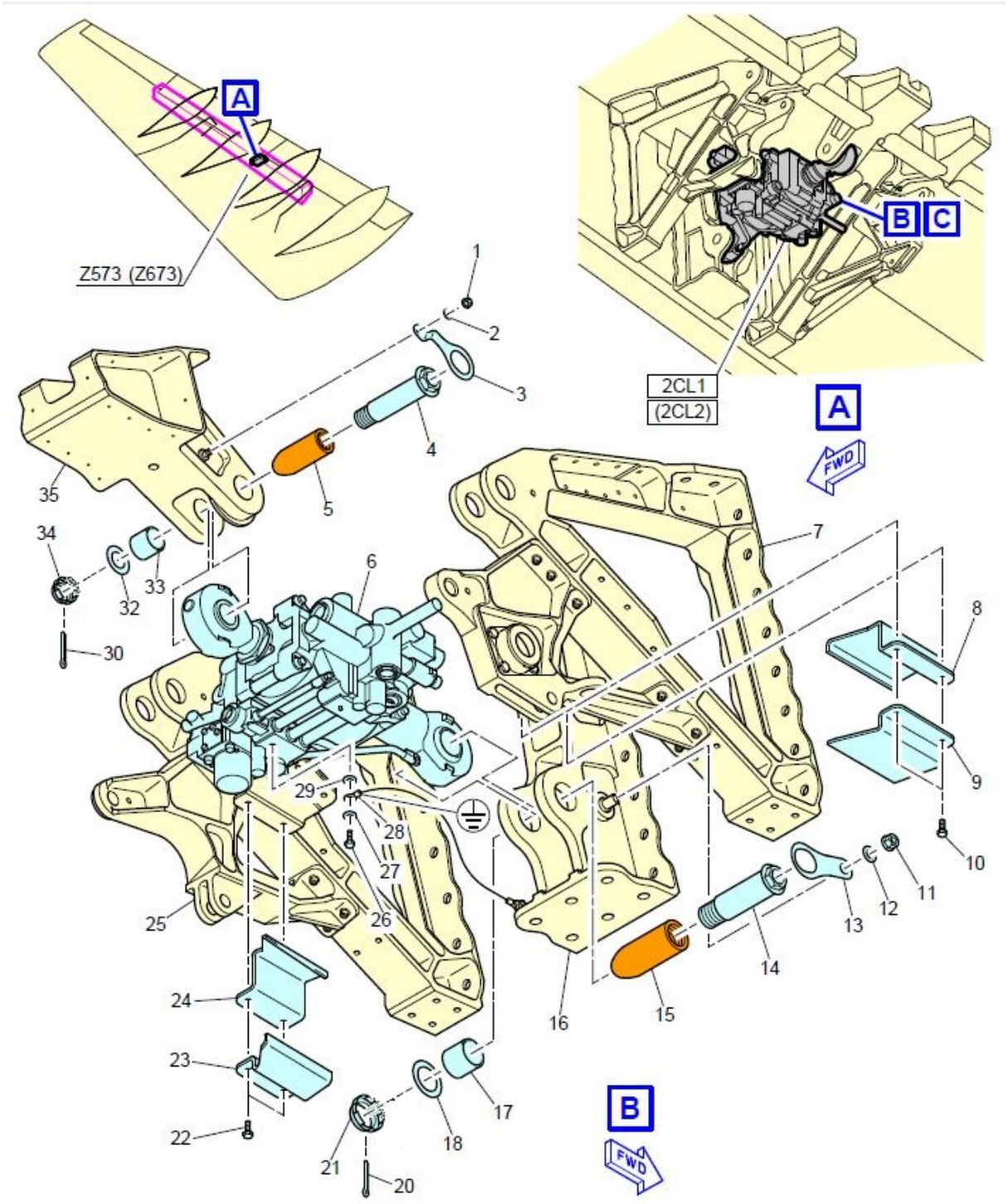

Réf : AJ-A-27-64-51-00AAA-520A-A	Selected applicability : ALL
Issue : 012	Date : March 20, 2017

Servo Control - Spoiler - Remove procedure

Fig. 2 - Spoiler Servo Controls (2CL1) and (2CL2)

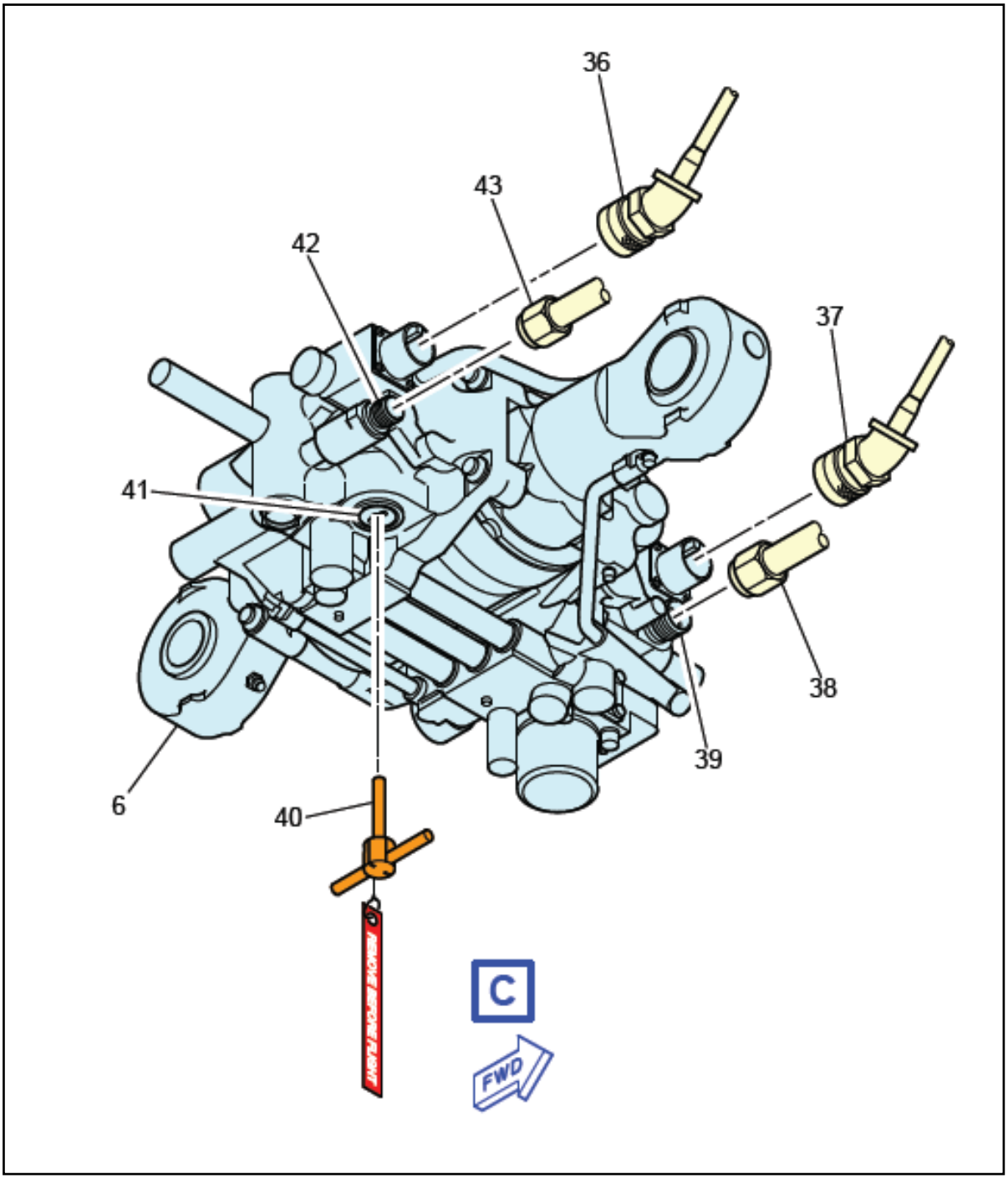

Réf : AJ-A-27-64-51-00AAA-520A-A	Selected applicability : ALL
Issue : 012	Date : March 20, 2017

Servo Control - Spoiler - Remove procedure

Fig. 3 - Spoiler Servo Controls (2CL1) and (2CL2)

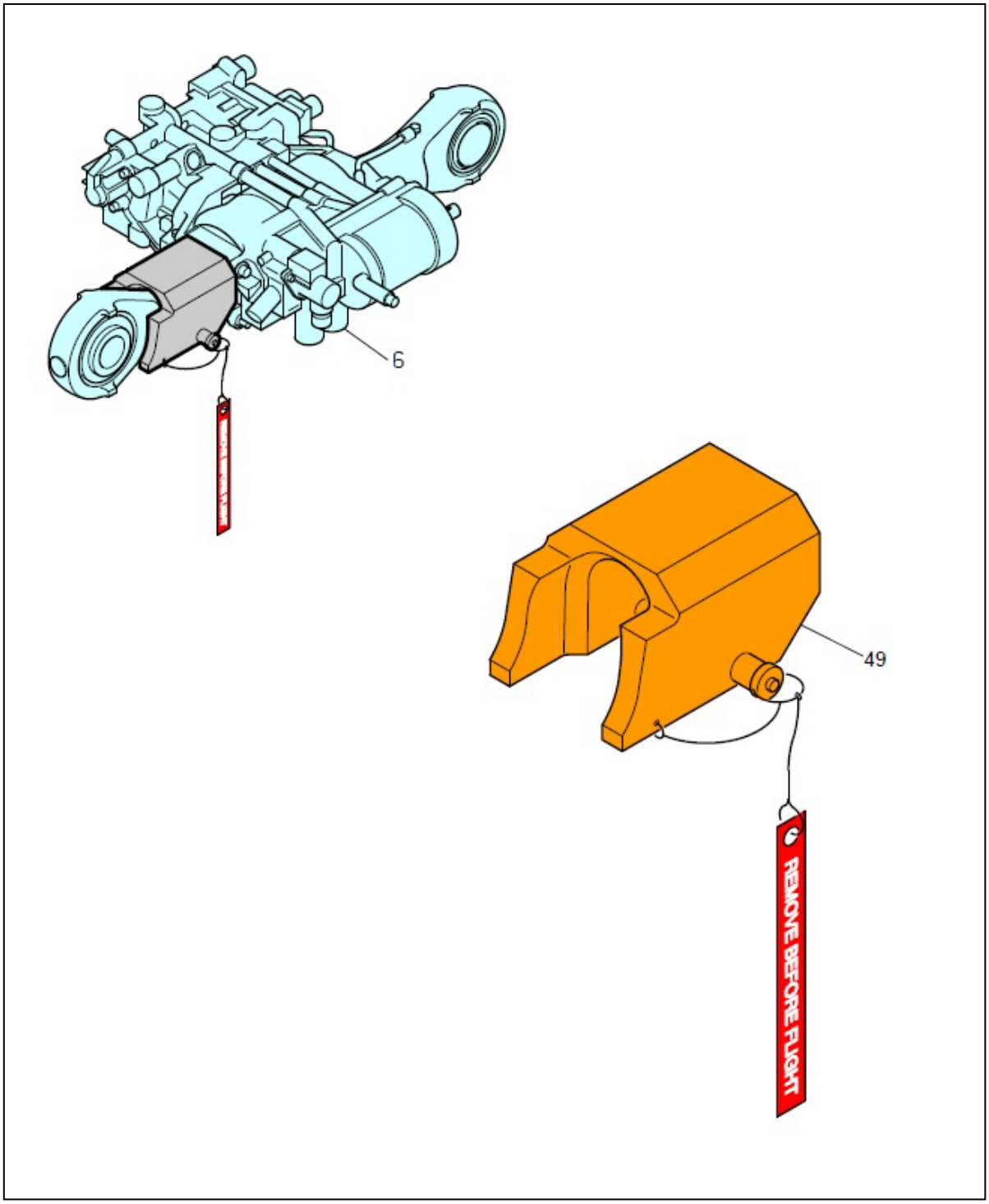

Réf : AJ-A-27-64-51-00AAA-520A-A	Selected applicability : ALL
Issue : 012	Date : March 20, 2017

Servo Control - Spoiler - Remove procedure.
Fig. 4 – Pin side stick locking.

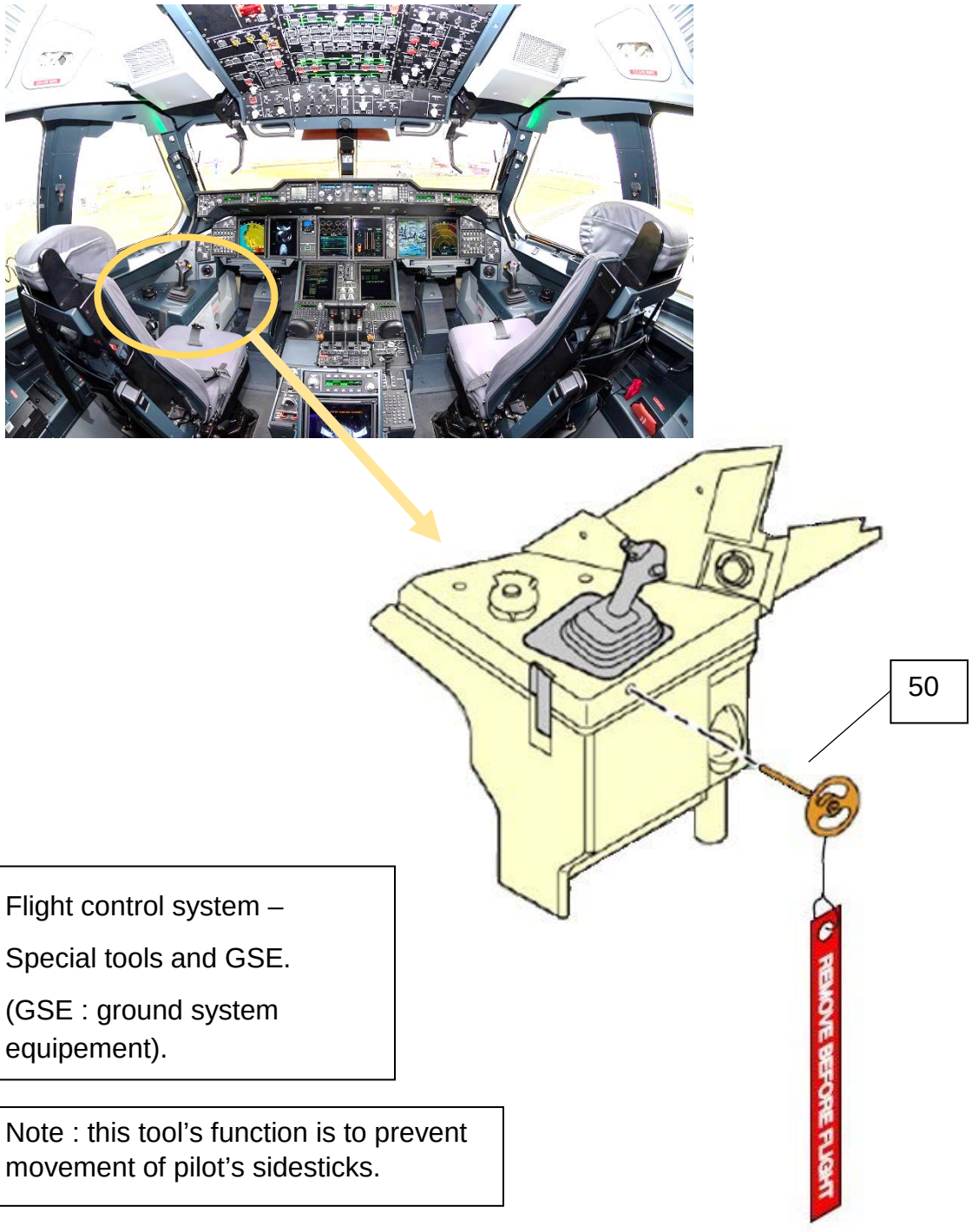

Flight control system –

Special tools and GSE.

(GSE : ground system equipement).

Note : this tool's function is to prevent movement of pilot's sidesticks.

Servo Control - Spoiler - Remove procedure

Fig. 5 – LOCKING TOOL FLAP CONTROL LEVER

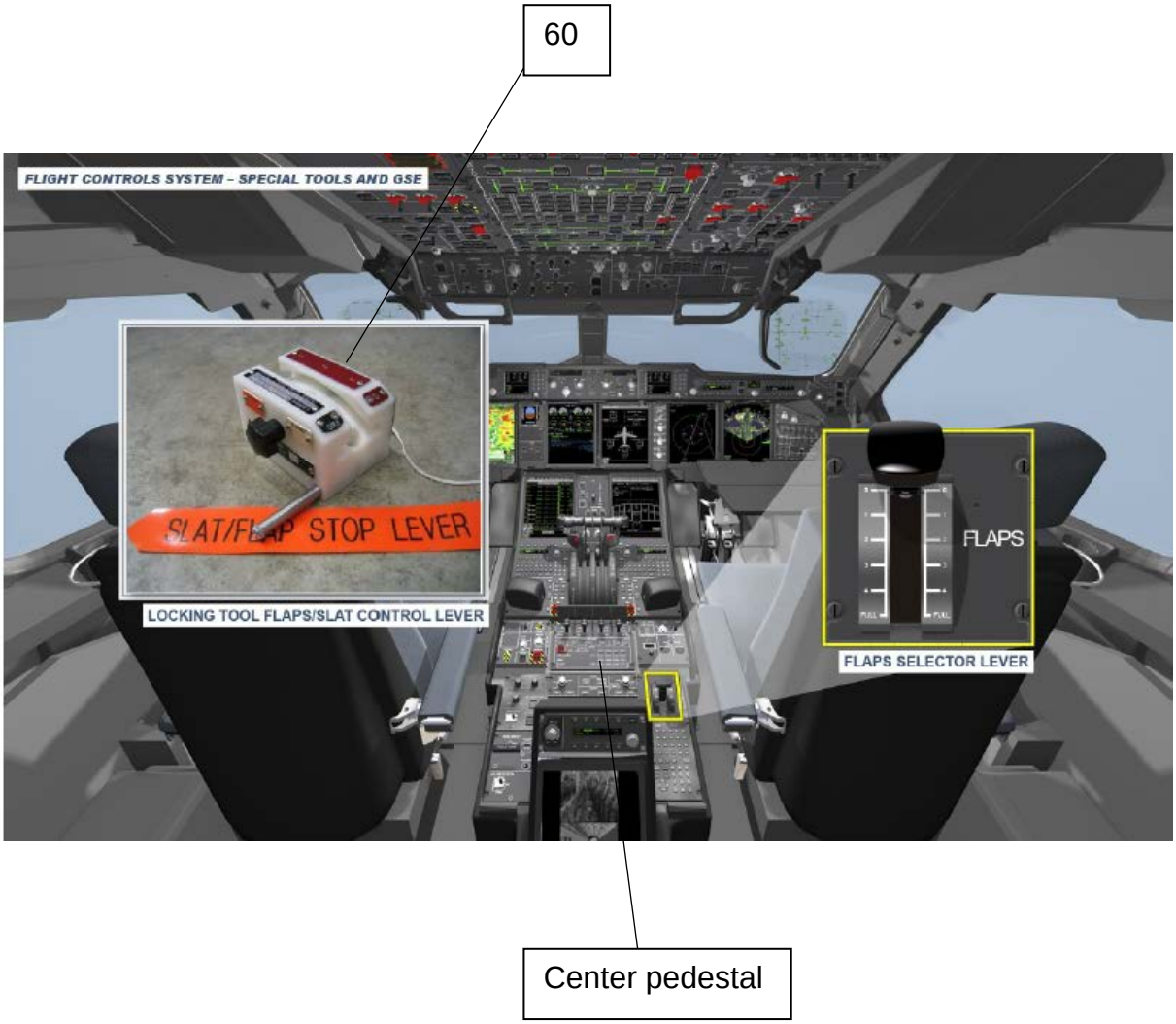

Note : this tool's function is to prevent flap movement during maintenance operations.

IPC - Spoiler Servo Controls description – Fig. 1

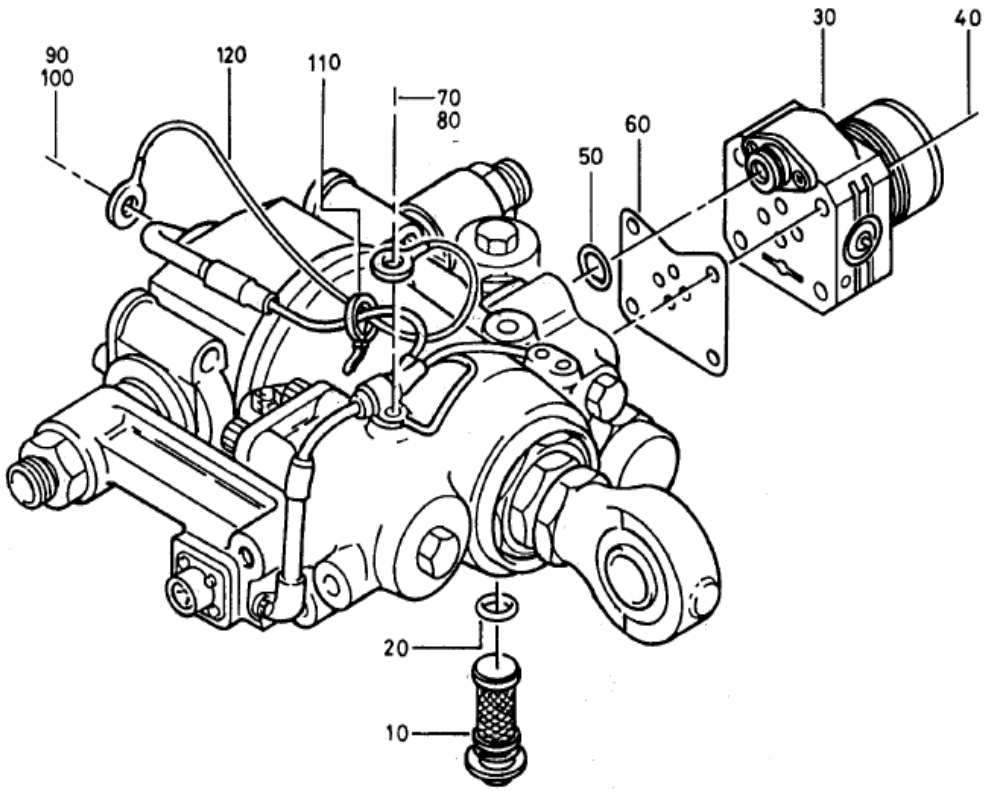

FIG-ITEM	PART NUMBER	1234567 NOMENCLATURE	USAGE FROM TO	UNIT PER ASSY
1 - 1C	31077-100	DELETED		
- 1E	31077-111	SERVOCONTROL-SPOILER VFA3T1 SEE 27-64-05-01B FOR NHA SEE 27-64-05-02B FOR NHA SEE 27-64-05-03B FOR NHA SEE 27-64-05-04E FOR NHA SEE 27-64-05-05E FOR NHA POST SB 27A1136		RF
- 1F	31077-112	SERVOCONTROL-SPOILER, INBOARD VFA3T1 SEE 27-64-05-01B FOR NHA SEE 27-64-05-02B FOR NHA SEE 27-64-05-03B FOR NHA		RF
10	341022	.FILTER-HP VFA3T1		1
20	NAS1611-016	.o-ring VACRT		1
30	A88004	.SERVOVALVE VC0328 CMM 27-60-03 OPT TO 340943-100 (VFA3T1) OPT TO 340943 (VFA3T1) OPT TO A88004-2 (VC0328) BUY PN A88004-003 (VC0328)		1
40	MS9924-26	.BOLT VACRT		4
50	NAS1611-112	.o-ring VACRT		1
60	340944	.GASKET VFA3T1		1

Spoiler Servo Control description – Fig 2.

